Namal University, Mianwali

Department of Electrical Engineering

Electronic Devices & Circuit (Lab)

Lab Project Report

Automatic Dusk to Dawn Light

Student Name	Student ID
Ahtisham Saleem	NIM-BSEE-2021-19
Muhammad Makki	NIM-BSEE-2021-23

Date: 10-01-2025

Instructor: Zulaikha Kiran

Table of Contents

1. Abstract:.....3
2. Introduction:.....3
3. Components Required:.....3
4. Simulation Circuit.....4
5. Hardware Circuit.....5
4. Working of Circuit:.....5
Stage 1: Power Supply Circuit (220V AC to 12V DC).....5
Stage 2: Dusk to Dawn Circuit.....6
4. Real Life Applications.....6
4. Conclusion.....6
5. References.....6

1. Abstract:

The main objective of this project is to design and implement a Dusk to Dawn Converter circuit that automatically switches on a light during low ambient light conditions (dusk) and turns it off during high ambient light conditions (dawn). The project consists of two stages; A power supply circuit that converts 220V AC to 12V DC. And a control circuit using a Light Dependent Resistor (LDR) and a Bipolar Junction Transistor (BJT) to detect light levels and control the output load.

2. Introduction:

A Dusk to Dawn Converter is an automated lighting system that turns lights on at dusk (low ambient light) and off at dawn (high ambient light). This system uses a combination of light-sensing components and a control circuit to detect changes in ambient light levels. The primary goal of such a system is to provide energy-efficient and hassle-free operation of lighting systems without the need for manual intervention.

The need for a Dusk to Dawn Converter arises from the increasing emphasis on energy conservation and automation. Manual operation of lighting systems can be inefficient and prone to human error, leading to unnecessary energy wastage. By automating the process, this converter ensures optimal lighting control, reduces electricity costs, and enhances security in residential, commercial, and public spaces. The simplicity of the circuit design also makes it cost-effective and accessible for various applications

3. Components Required:

1. Transformer (220V AC to 12V AC) - 1
2. Diodes (1N4007) - 4
3. Voltage regulator (7812) - 1
4. Capacitors (1000 µF and 100 µF) - 2
5. LDR (Light Dependent Resistor) - 1
6. Resistors (10 kΩ, 1 kΩ, 220 Ω) - 3
7. BJT (e.g., BC547) - 1
8. Potentiometer (1 kΩ) - 1
9. LED or 12V bulb - 1
10. Connecting wires and breadboard/PCB

4. Simulation Circuit

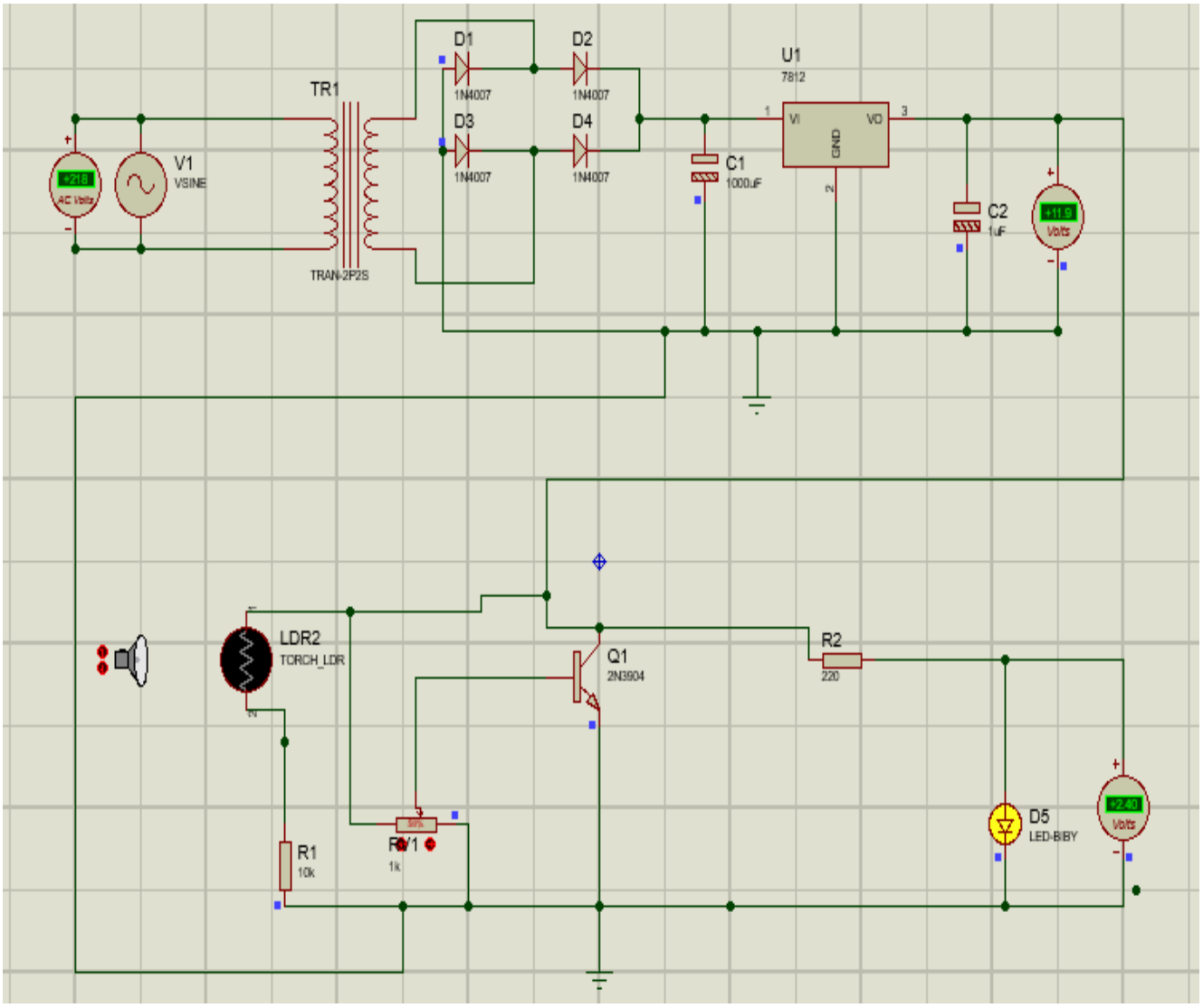

5. Hardware Circuit

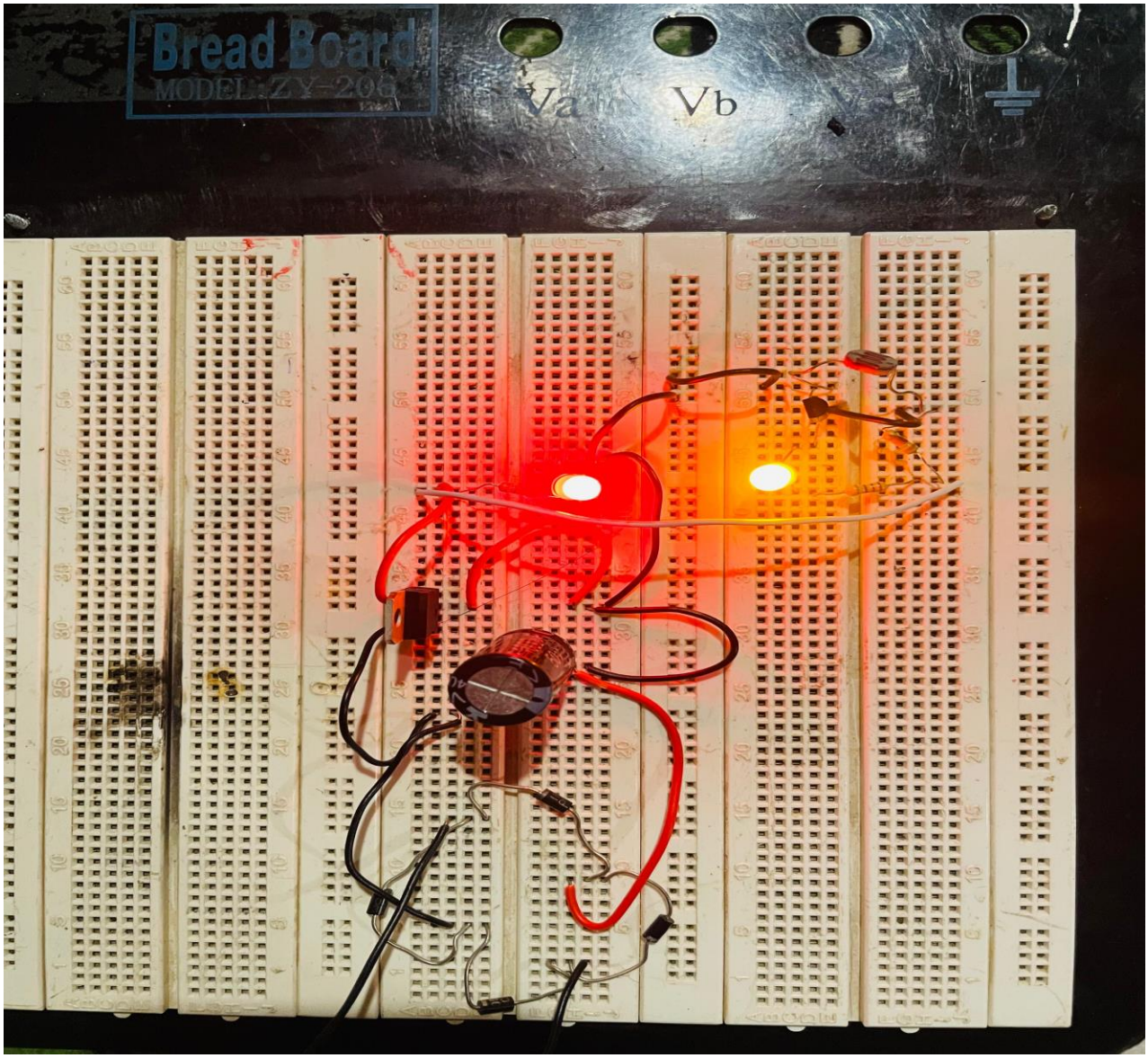

4. Working of Circuit:

Stage 1: Power Supply Circuit (220V AC to 12V DC)

1. Use a step-down transformer to convert the mains 220V AC to 12V AC.
2. Employ a bridge rectifier configuration using four diodes (1N4007) to convert AC voltage to pulsating DC.
3. Use a smoothing capacitor (1000 µF) to reduce voltage ripples.
4. Regulate the output voltage to a steady 12V DC using the 7812 voltage regulator IC.
5. Add a smaller capacitor (100 µF) across the output terminals for additional filtering.

Stage 2: Dusk to Dawn Circuit

1. Connect the LDR and a 10 kΩ resistor in a voltage divider configuration to sense ambient light levels.
2. Connect the base of the BJT to the midpoint of the voltage divider.
3. Use a potentiometer (1 kΩ) to fine-tune the sensitivity of the circuit.
4. Connect a load (LED or 12V bulb) in series with the BJT collector and a 220 Ω resistor to limit current.
5. Power the circuit using the regulated 12V DC supply from Stage 1.

4. Real Life Applications

Although this project has much importance in today's world where we are moving towards automation. Some of its significant use cases are listed below:

1. Automatic street lighting.
2. Garden or outdoor lighting systems.
3. Energy-efficient lighting control.
4. Security lighting for homes and offices.

4. Conclusion

The Dusk to Dawn Converter circuit provides an efficient and reliable method to automate lighting systems based on ambient light levels. By utilizing a simple BJT-based control mechanism and a regulated power supply, the system ensures cost-effective and maintenance-free operation. This project demonstrates the practical application of basic electronic components to achieve real-world automation solutions.

5. References

[1] "Dusk-to-Dawn Light Sensor Circuit," Electronics Hub. [Online]. Available: https://www.electronicshub.org/dusk-to-dawn-light-sensor-circuit/.

[2] OpenAI, "ChatGPT: Optimizing language models for dialogue," [Online]. Available: https://openai.com/chatgpt/. [Accessed: Jan. 10, 2025].